KITCHEN SINK

CODE: 304 SUS

FEATURES
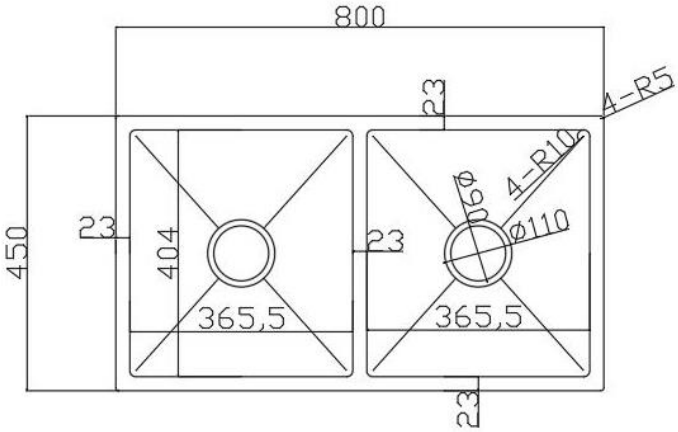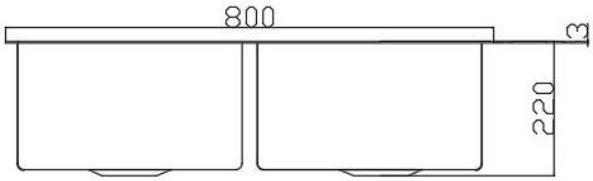
- Material stainless steel
- Extent: 800mm x 450mm
- Depth: 220mm